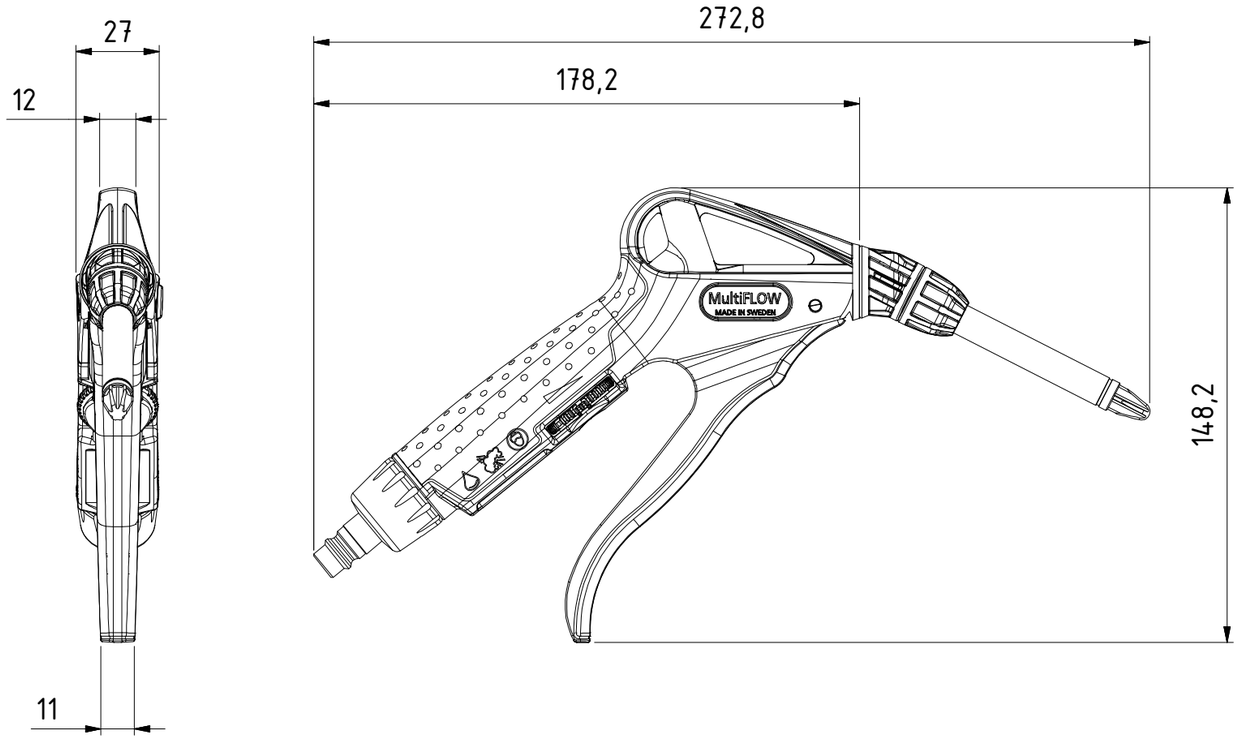

Item	Qty	Description	Material
19	1	Tube cap	Plastic
18	1	MF tube - star-tip	Brass, Plated
17	1	Nozzle adapter	Plastic
16	1	Nipple	Steel, Zn8 silver
15	1	Guide bushing	Plastic
14	1	O-ring	NBR
13	1	O-ring	NBR
12	1	Lip seal	NBR
11	1	Valve	Plastic
10	1	O-ring	NBR
9	1	Label	Plastic
8	1	Spring	Stainless steel
7	1	O-ring	NBR
6	1	Screw	Steel
5	1	Wheel	Plastic
4	1	Spacer	Plastic
3	1	Valve ball	Plastic
2	1	Handle	Plastic
1	1	Body	Plastic

Product No. 112103100

Nominal flow Ø DN:	mm
Connection Stroke:	mm
Max WP Connected:	16 bar
Min BP Connected:	64 bar
Temperature range:	-20°C - +60°C@16 bar WP,+80°C@10 bar WP
Connection:	320 nipple
Sealing material:	NBR
Hexagon:	

Scale	Drawn	Checked	Appr.	ECO	Date
1 : 2	CABANLA	CABLHE	CABJOOL		2017-11-08

	Drawing No.	Issue	Sheet
Assembly Drawing	502103100	AB	1 /(1)

A3

This document must not be copied, either completely or in part, without permission. Any infringement will have legal consequences © All rights reserved